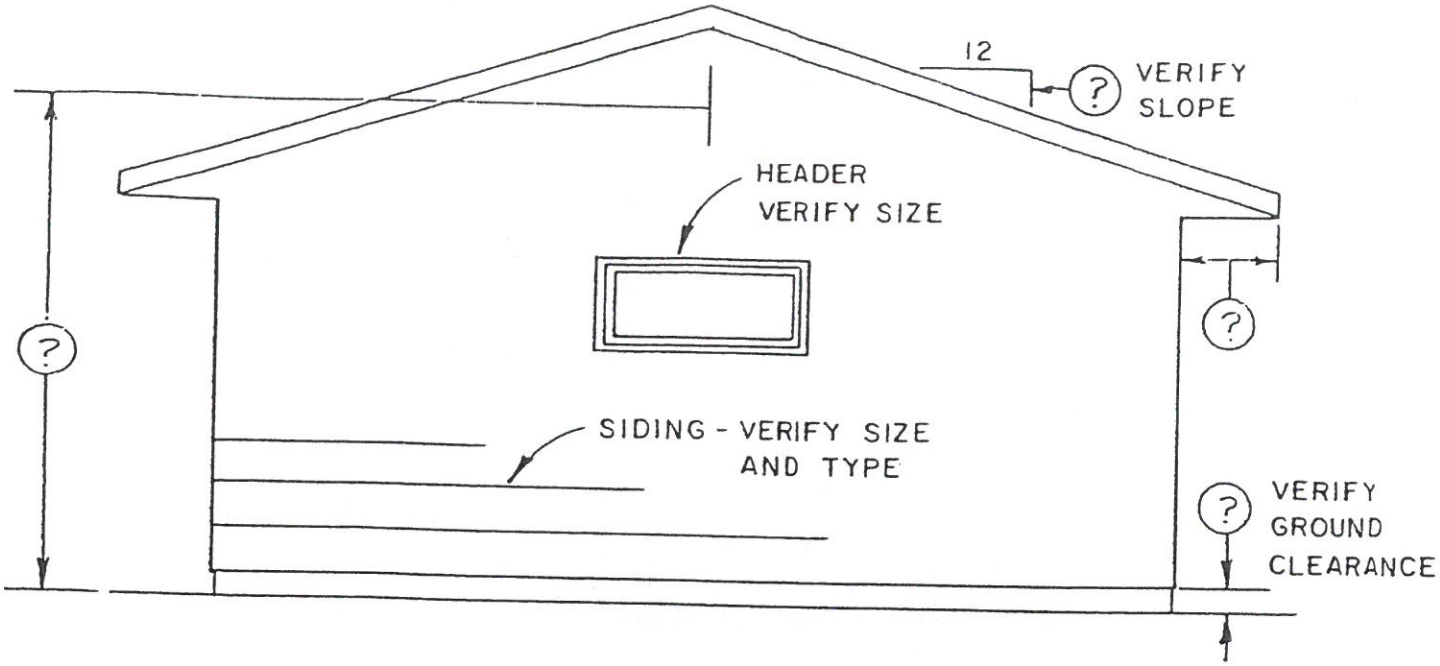

SIDE ELEVATION 1/4" = 1'-0"

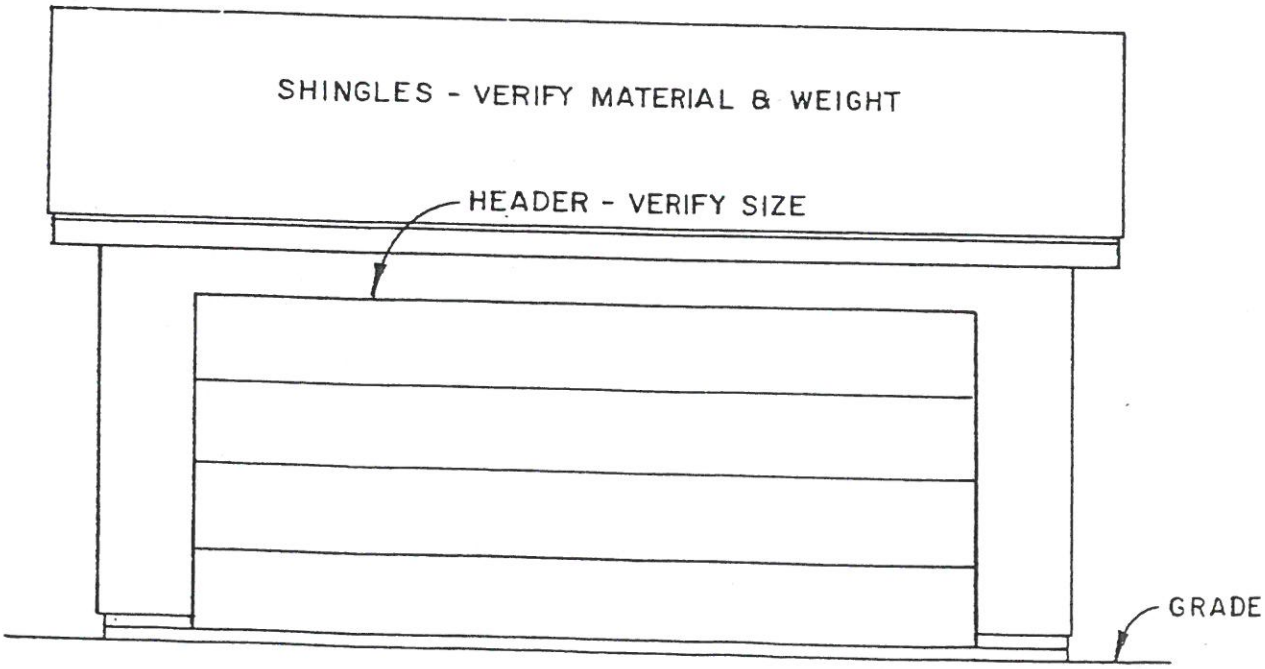

FRONT ELEVATION 1/4' = 1'-0"

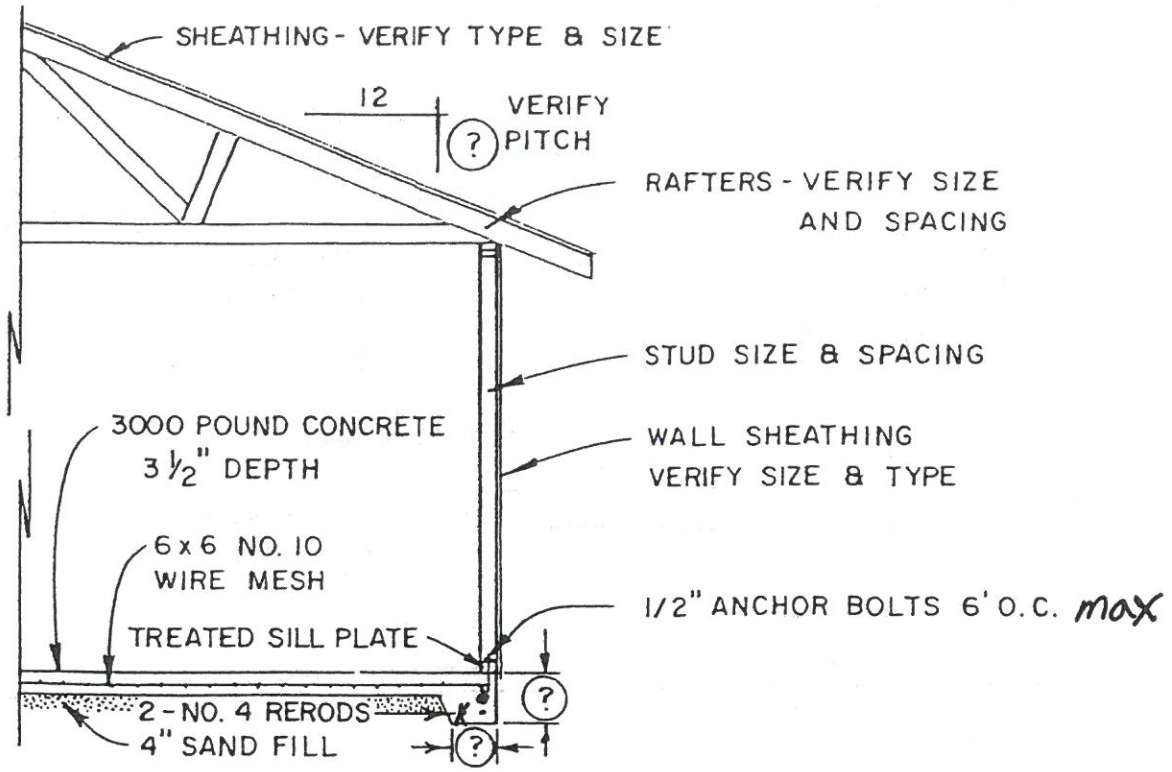

CROSS SECTION 1/4" = 1'-0"

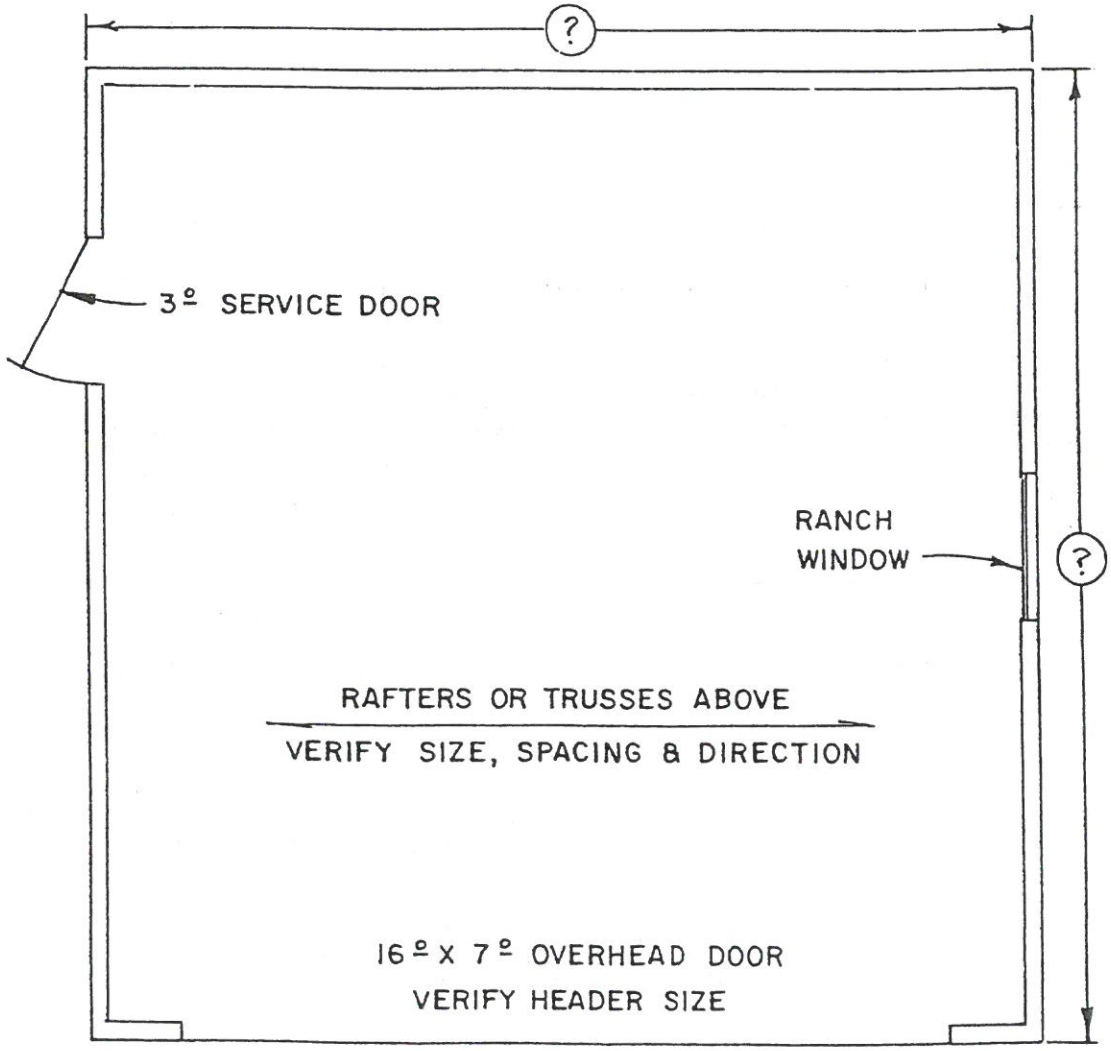

WALL BRACING

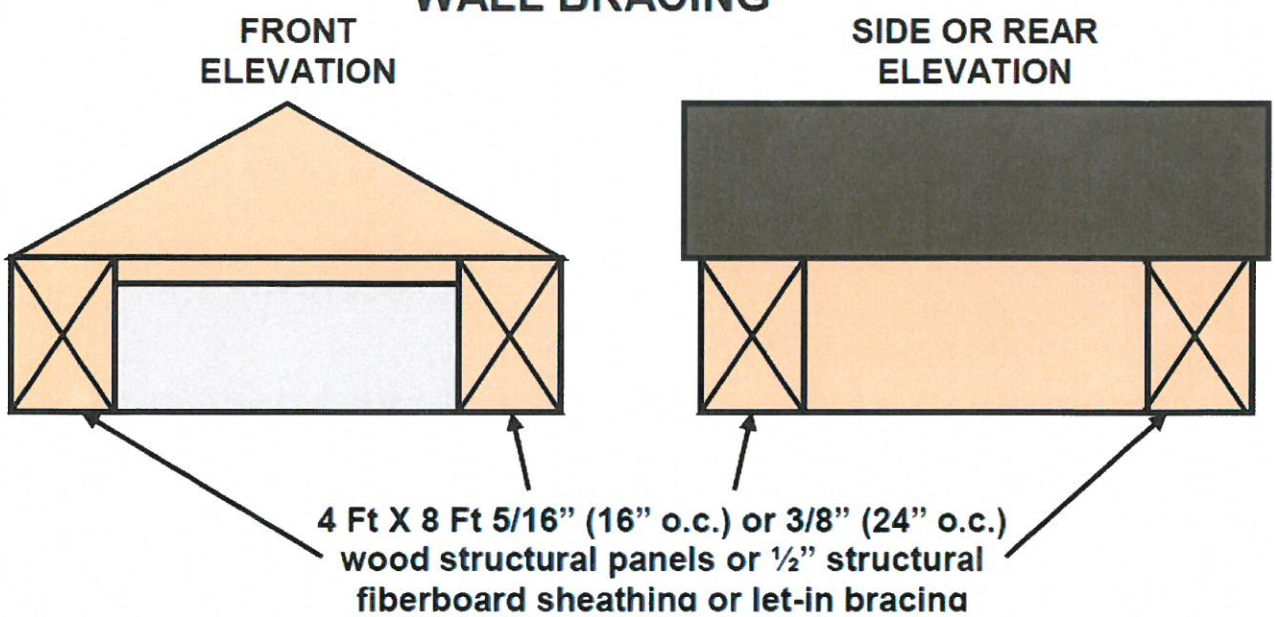

WALL BRACING FOR NARROW WALLS

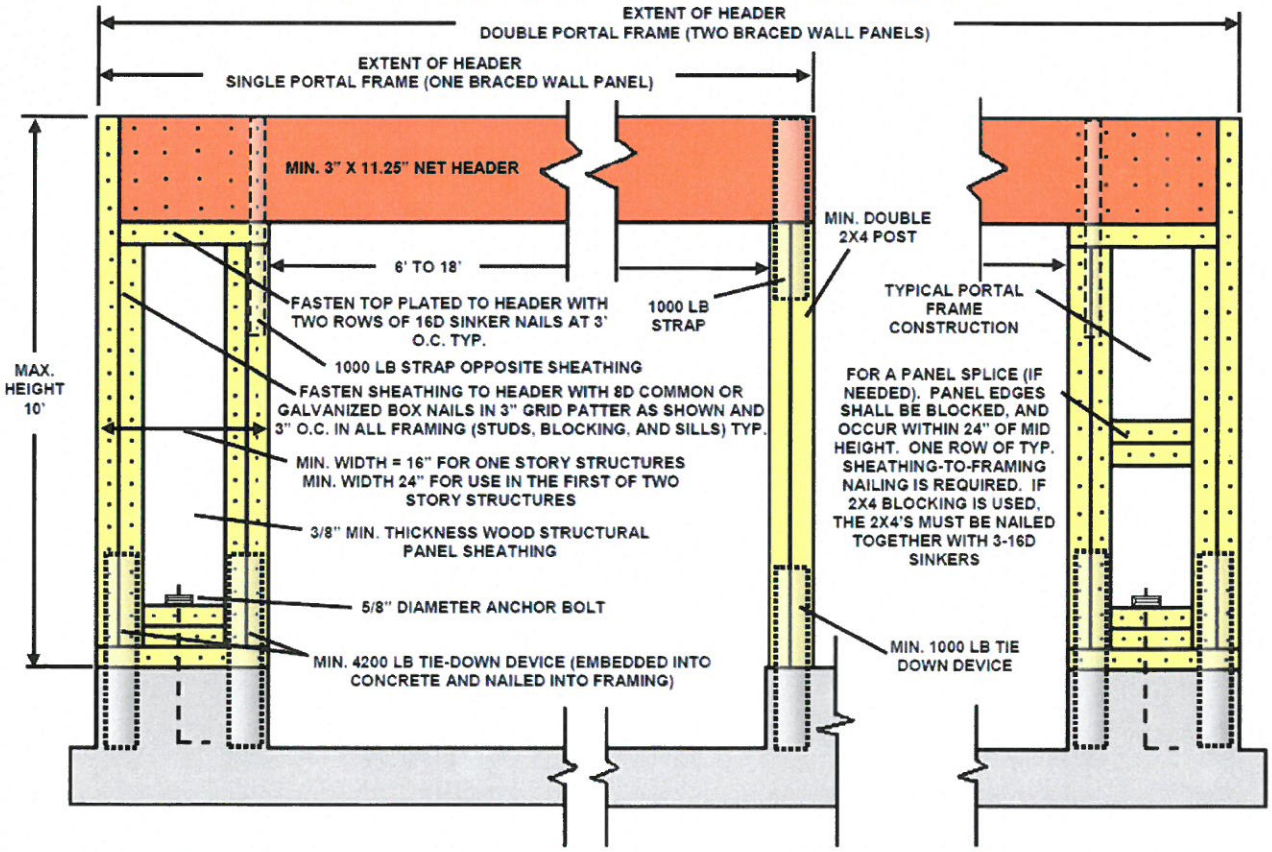

ALTERNATE BRACED WALL PANEL ADJACENT TO A DOOR OR WINDOW OPENING
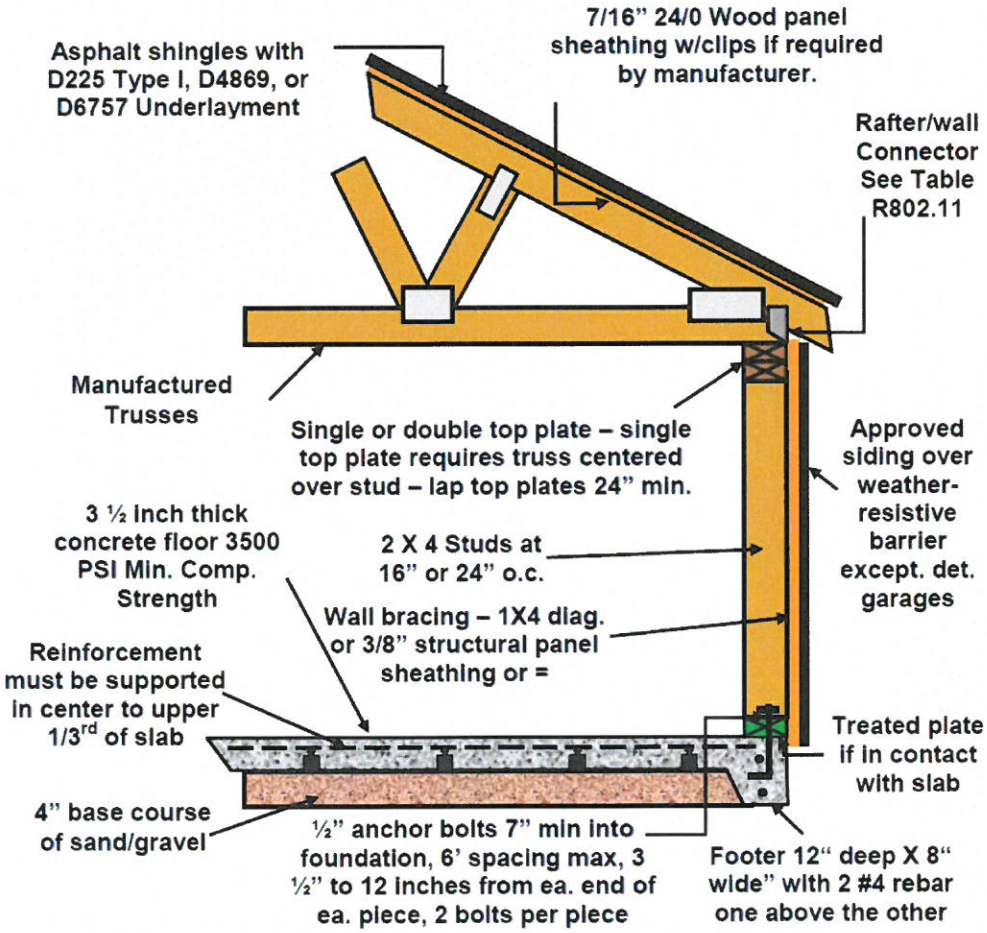
HEADER SIZES SUPPORTING SPANS OF 20, 24, AND 28 FT						
	20 Ft		24 Ft		28 Ft	
Span	Header Size	# Jack Studs	Header Size	# Jack Studs	Header Size	# Jack Studs
Up to 3 ft	2-2X4	1	2-2X4	1	2-2X6	1
Up to 4 ft	2-2X6	1	2-2X6	1	2-2X6	1
Up to 6 ft	2-2X8	2	2-2X10	2	2-2X10	2
Up to 7 ft	2-2X10	2	2-2X12	2	2-2X12	2
Up to 8 ft	2-2X12	2	3-2X10	2	3-2X10	2
Up to 9 ft	3-2X10	2	3-2X12	2	3-2X12	2
Up to 10 ft	3-2X12	2	4-2X12	2	4-2X12	2
Up to 12 ft	4-2X12	2	*EWPR		*EWPR	
Over 12 ft	*EWPR		*EWPR		*EWPR	
*Engineered wood product required